23 131 000 **EUROCUBE SINGLE-LEVER BASIN MIXER S-SIZE**

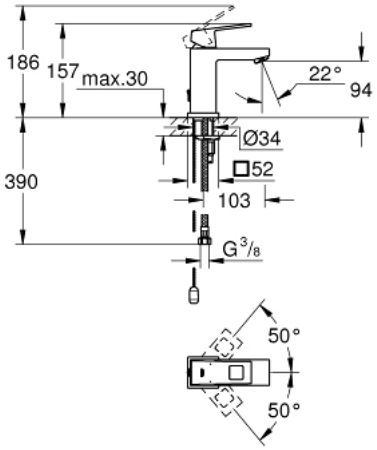

PRODUCT DESCRIPTION

- Colour: chrome
- single hole installation
- metal lever
- GROHE SilkMove 28 mm ceramic cartridge
- temperature limiter
- GROHE Long-Life finish
- GROHE FastFixation Plus installation system
- mousseur
- retractable chain
- flexible connection hoses

23 131 000 **EUROCUBE SINGLE-LEVER BASIN MIXER S-SIZE**

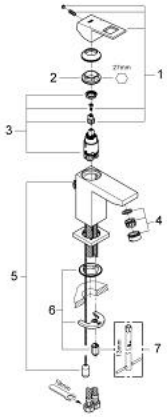

SPARE PARTS, Sep 2010 – spareParts.validDate.now

1: Lever (Order-nr. 46786000)

2: Fitting ring (Order-nr. 46715000)

3: Cartridge (Order-nr. 46580000)

4: Mousseur (Order-nr. 13929000)

5: Chain support (Order-nr. 06815000)

6: Shank mounting kit (Order-nr. 46645000)

7: Mounting wrench (Order-nr. 19017000)*

* Optional accessories